Declaration: This document belongs to ShenZhen BACTRIANUS MOTOR Co.,LTD; Without authorization, no organization or individual is allowed to copy, distribute, or use all or part of the content of this document for other purposes.

other 3.2

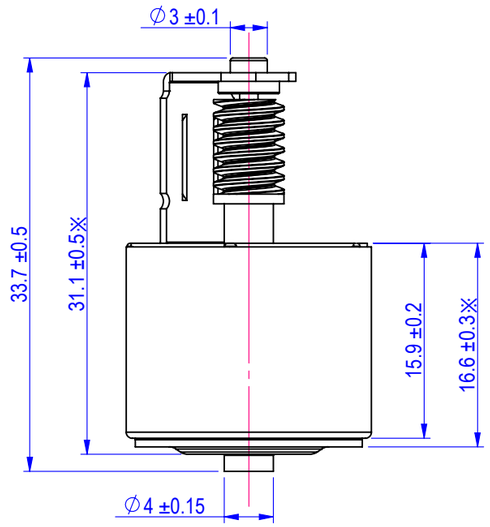

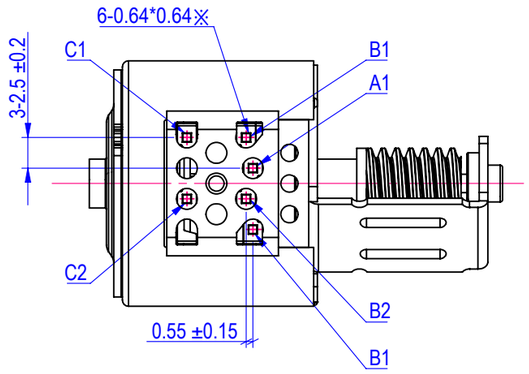

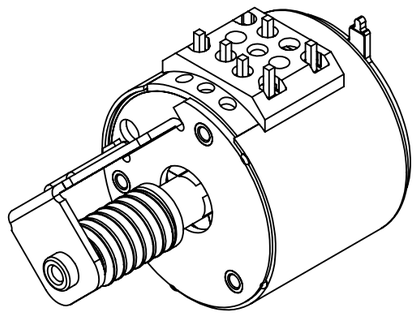

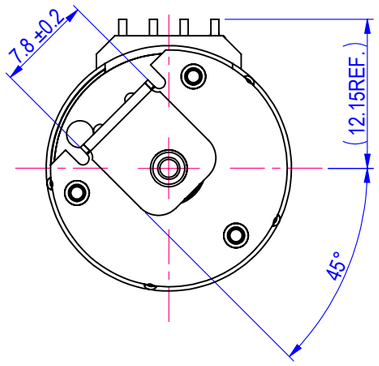

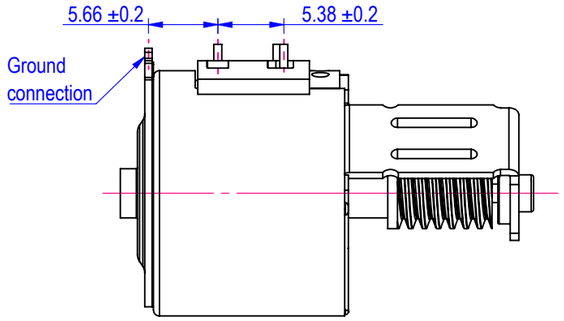

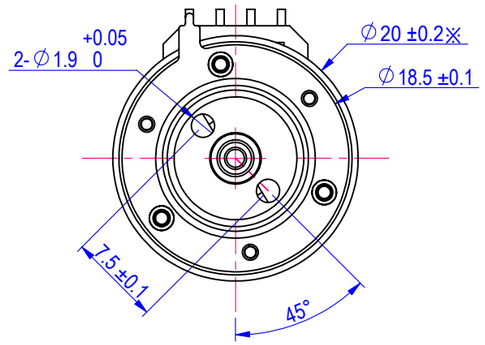

Technical Specification			
No.	Item	Specification	Test Conditions
1	Step Angle	12°/Step	
2	Excitation	3-3 Phase Unipolar /540~1200pps	DC 12 V
3	Rated Voltage	DC 12 V	
4	Drive Circuit	Separately attached drawing	
5	Insulation Class	Class H	
6	Operating temperature and Humidity Range	-40℃~+85℃ ; 15%~95%	
7	Storage temperature and Humidity Range	-40℃~+110℃ ; 85% or less	
8	Resistance per phase	16 ± 8% Ω / phase	25℃
9	Current	No load limit bus current ≤200 mA	The current is suitable for -40℃~+85℃ , DC 12V , 540pps
10	Coil inductance	11 ±10% mH /phase	1KHz , Series Testing
11	Insulation Resistance	1 MΩ or more	DC 100V
12	Max. self-starting frequency	≥540 pps	DC 12V,3-3 Phase Unipolar ,No load limit
13	Max. continuous corresponding frequency	≥1200 pps	DC 12V,3-3 Phase Unipolar ,No load limit
14	Detent Torque	< 4 gf.cm	DC 0V,23±5℃
15	Step Error	12° ± 10%	
16	Temperature raising	≤ 100℃	After operating 5 minutes , DC12V , 540pps , 3-3 Phase Unipolar ,No load limit ; Motor side , normal Temp
		≤ 90℃	After operating 5 minutes , DC12V , 540pps , 3-3 Phase Unipolar ,radail load 20gf.cm ; Motor side , normal Temp

Noise		
Test Conditions : Rated Voltage, micro step drive, 3 phases, No load, test 10cm that was calculated from mount. Background noise 20dB(A) max.		
Frequency	Noise	Abnormal Noise
540 pps	≤23 dB (A)	No
1200 pps	≤25 dB (A)	No

Torque at room Temperature	Temperature 23℃±5℃	Torque (gf.cm)		Frequency
		pull-out Torque	pull-in Torque	
	Driving Voltage DC 12V	≥ 21	≥15	540 pps
		≥ 21	≥15	720 pps
		≥ 21	≥15	960 pps
		≥ 21	≥15	1200 pps
Torque at high Temperature	Temperature 85℃±5℃	Torque (gf.cm)		Frequency
		pull-out Torque	pull-in Torque	
	Driving Voltage DC 12V	≥ 20	≥ 14	540 pps
		≥ 20	≥ 14	720 pps
		≥ 20	≥ 14	960 pps
		≥ 20	≥ 14	1200 pps
Torque at low Temperature	Temperature -40℃±5℃	Torque (gf.cm)		Frequency
		pull-out Torque	pull-in Torque	
	Driving Voltage DC 12V	≥ 22	≥ 16	540 pps
		≥ 22	≥ 16	720 pps
		≥ 22	≥ 16	960 pps
		≥ 22	≥ 16	1200 pps

DESIGNER		AUDITOR		TECHNOLOGY		APPROVER	
DATE		DATE		DATE		DATE	

BKA 深圳博柯安电机有限公司
ShenZhen BACTRIANUS MOTOR Co.,LTD

Cpk>1.67 ⊙ Critical Dimension ☆
Cpk>1.33 ⊗ Key Dimensions ※
Cpk>1.00 ⊚ Reference Dimensions ( )

Component Diagram			
Component Name	BKA PM20C 3 Phase Stepper Motor	Unit	mm
Component No.	BKA-PM20C-01A0		
Quality		Proportion	2:1
Drawing number		ver sion	A0
Stage Markers	S A		Page 1 , total 1 Page