Declaration: This document belongs to ShenZhen BACTRIANUS MOTOR Co.,LTD; Without authorization, no organization or individual is allowed to copy, distribute, or use all or part of the content of this document for other purposes.

other 3.2

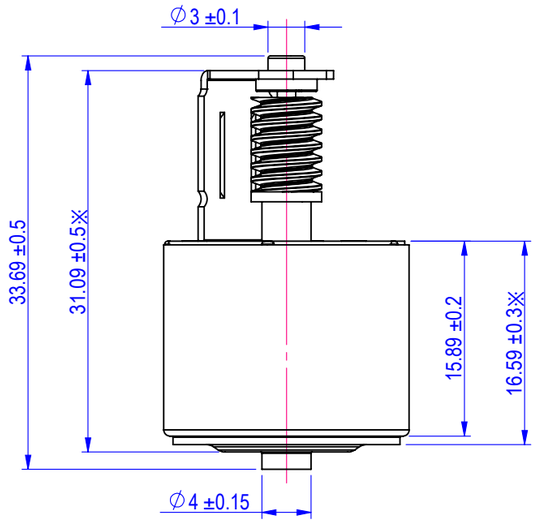

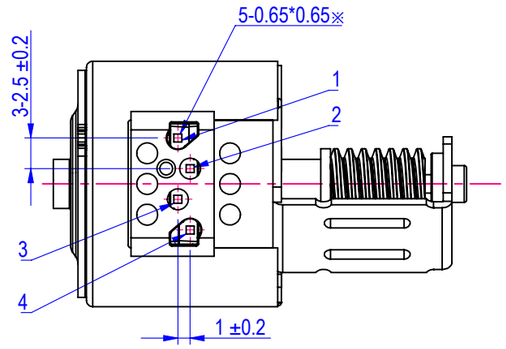

CONNECTOR PIN LOCATION				
PIN ON	CCW←→CW (SEEN FROM FLANGE SIDE)			
1	+	+	-	-
2	-	+	+	-
3	-	-	+	+
4	+	-	-	+

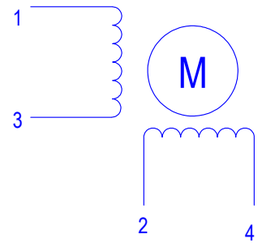

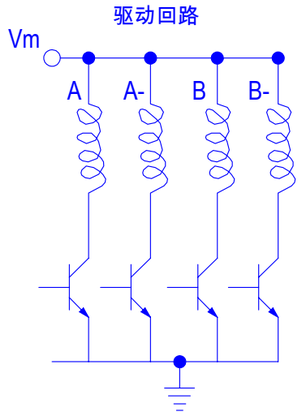

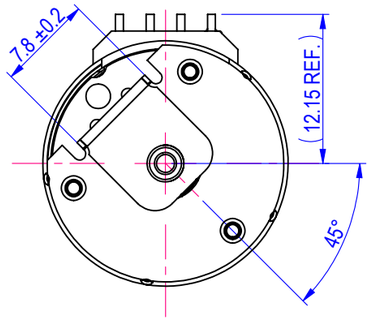

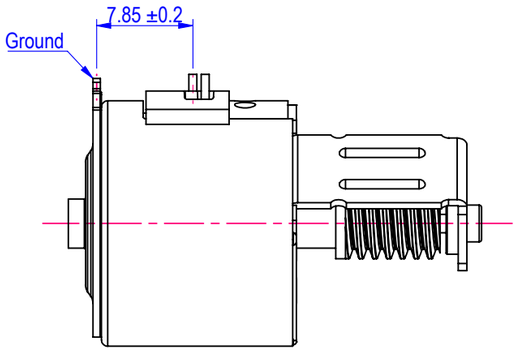

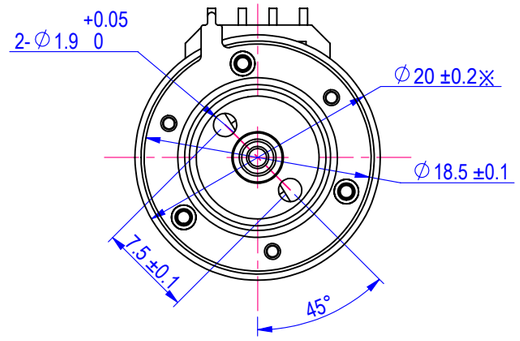

Technical Specification			
No.	Item	Specification	Test Conditions
1	Step Angle	18°/Step	
2	Excitation	2-2 Phase Unipolar /360~800pps	DC 12 V
3	Rated Voltage	DC 12 V	
4	Drive Circuit	As shown on the top right	
5	Insulation Class	Class H	
6	Operating temperature and Humidity Range	-40℃~+85℃ ; 15%~95%	
7	Storage temperature and Humidity Range	-40℃~+110℃ ; 85% or less	
8	Resistance per phase	29 ± 8% Ω / phase	25℃
9	Current	No load limit bus current ≤ 200 mA	The current is suitable for -40℃~+85℃ , DC 12V , 360 pps
10	Coil inductance	16 ±10% mH /phase	1KHz , Series Testing
11	Insulation Resistance	1 MΩ or more	DC 100V
12	Max. self-starting frequency	≥400 pps	DC 12V,2-2 Phase Unipolar ,No load limit
13	Max. continuous corresponding frequency	≥800 pps	DC 12V,2-2 Phase Unipolar ,No load limit
14	Detent Torque	< 4 gf.cm	DC 0V,23±5℃
15	Step Error	18° ± 10%	
16	Temperature raising	≤100℃	After operating 5 minutes , DC12V , 360pps , 2-2 Phase Unipolar ,No load limit ; Motor side , normal Temp
		≤90℃	After operating 5 minutes , DC12V , 360pps , 2-2 Phase Unipolar ,radail load 20gf.cm ; Motor side , normal Temp

Noise		
Test Conditions : Rated Voltage, micro step drive, 2 phases, No load, test 10cm that was calculated from mount. Background noise 20dB(A) max.		
Frequency	Noise	Abnormal Noise
360 pps	≤23 dB (A)	No
800 pps	≤25 dB (A)	No

		Torque (gf.cm)		
	Temperature 23℃±5℃	pull-out Torque	pull-in Torque	Frequency
Torque at room Temperature	Driving Voltage DC 12V	≥ 21	≥15	360 pps
		≥ 21	≥15	480 pps
		≥ 21	≥15	640 pps
		≥ 21	≥15	800 pps
	Temperature 85℃±5℃	pull-out Torque	pull-in Torque	Frequency
Torque at high Temperature	Driving Voltage DC 12V	≥ 20	≥ 14	360 pps
		≥ 20	≥ 14	480 pps
		≥ 20	≥ 14	640 pps
		≥ 20	≥ 14	800 pps
	Temperature -40℃±5℃	pull-out Torque	pull-in Torque	Frequency
Torque at low Temperature	Driving Voltage DC 12V	≥ 22	≥ 16	360 pps
		≥ 22	≥ 16	480 pps
		≥ 22	≥ 16	640 pps
		≥ 22	≥ 16	800 pps

DESIGNER		AUDITOR		TECHNOLOGY		APPROVER	
DATE		DATE		DATE		DATE	

BKA 深圳博柯安电机有限公司 ShenZhen BACTRIANUS MOTOR Co.,LTD

Cpk>1.67 ⊙ Critical Dimension ☆
Cpk>1.33 ⊗ Key Dimensions ※
Cpk>1.00 ⊚ Reference Dimensions ( )

Component Diagram			
Component Name	PM20 Stepper Motor	Unit	mm
Component No.	BKA-PM20-01A1		
Quality		Proportion	2:1
Drawing number		ver sion	A1
Stage Markers	S A		Page 1 , total 1 Page