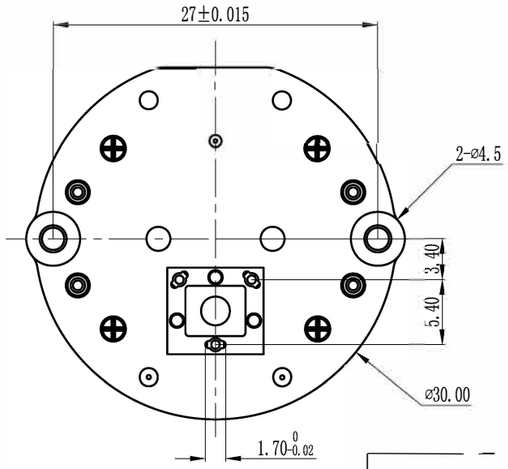

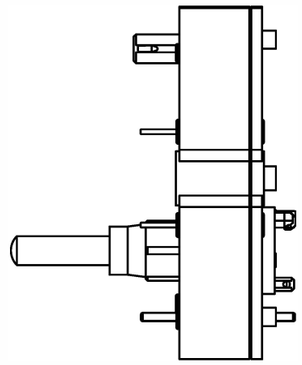

Suggestions for opening holes in LED PCB

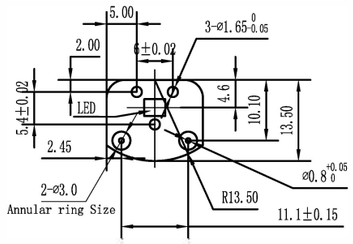

The Size of BKA30L-R1H LED

PCB of LED
LED: PLCC-4
LED Size:
3.5*2.8*1.9

The Size of VID23-05AR1 LED

PCB of LED
LED: PLCC-2
LED Size:
3.4*3*1.95

All of the BKA30L-R5 motors have enough Space to assemble PLCC-2 LED

It's BKA30L-R5W Size, is same of the size of VID23-05BPR1

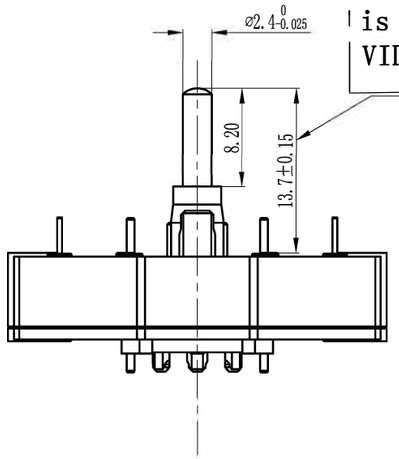

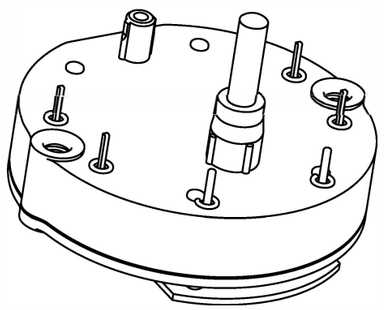

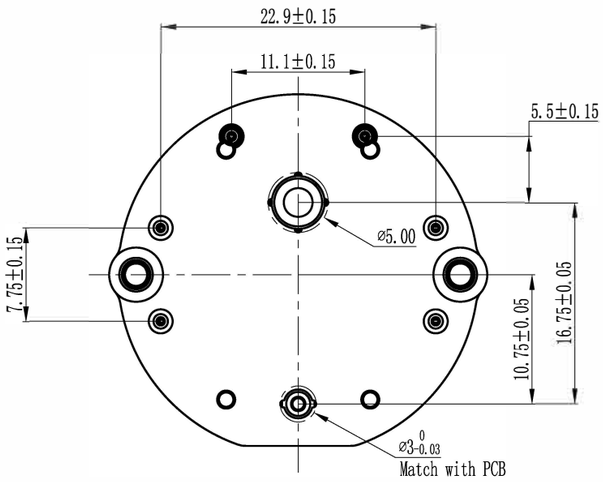

Parameter	Sym.	Test Conditions	Min.	Type	Max.	Units
Operating Temperature	Ta		-40		105	℃
Coil Resistance	Rb		260	280	300	Ω
Operating Current	Im	fz=200Hz		15	20	mA
Magnetic Saturation Voltage	Ubs				9	V
Start-Stop Frequency	fss	JL=2E-7Kg/m*2			200	Hz
Maximum Driving Frequency	fm	JL=2E-7Kg/m*2			600	Hz
Dynamic Torque	M200	fz=200Hz	0.9	1.1	See fig.3	mNm
	M400	fz=400Hz	0.75	0.9		mNm
Static Torque	Ms	Ub=5V	3.5	4.0		mNm
Backlash	σ		0.5	0.7	1.0	Degree
Axial Push-on Force on shaft	FA	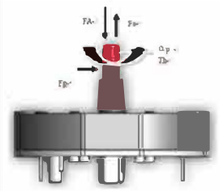	100	120		N
Axial Pull-off Force on shaft	Fa		70	80		N
Radial Force on shaft	Fp		12	15		N
Imposed Acceleration	αp			1,000		Rad/s*2
Holding Torque on shaft	Th		60	80		mNm
Maximum Inertia of the load on shaft	Jm	see Table 4				Kgm*2
Noise Lever	SPL	see Fig.14		38	42	dBA
Angle of Rotation	β				320	Degree
Tamb=25℃,Ub=5V;unless otherwise specified						

					BKA30L-R5W	DWG NO.	
						WEIGHT	g
				PART NAME	Motor Assembly	QUANTITY	1
MARK NUMBER	DIVISION	ECN NO.	SIGANATURE	DATE	MATERIAL	SCALE	1:1
DESIGN			Q A				
CHECK			APPV'D				
ENGINEERING			DATE				

REV. 01
SHEET 1 OF 1

BKA ShenZhen Bactrianus Motor Co. LTD

UNLESS OTHERWISE SPECIFIED
TOLERANCES ARE
LINEAR 0~5 ±0.02
5~10 ±0.03
>10 ±0.05
ANGULAR ±0.3deg.